CAMBRIDGE DOOR

Tradition, Craftsmanship, Innovation

CUSTOMER	P.O. NO.	ITEM NO.	PAGE NO.

DOOR SERIES	SPECIES	FINISH	POLYBAG

FRAME OPENING SIZE	DOOR PREFIT SIZE	LOUVER	LIGHT	MORTISE HOLDER/STOP-DEGREE OF OPENING
X	XX	SIZE	SIZE	
		LOCKSTILE	LOCKSTILE	FLUSH BOLTS-TEMPLATE
		BTM. RAIL	TOP RAIL	
		TYPE	TYPE	STRIKE-TEMPLATE

HINGE

SIZE	MFG. NO.
TEMPLATE NO.	

LOCK

MFG. NO.
TEMPLATE NO.

TOP OF DOOR TO TOP OF HINGE

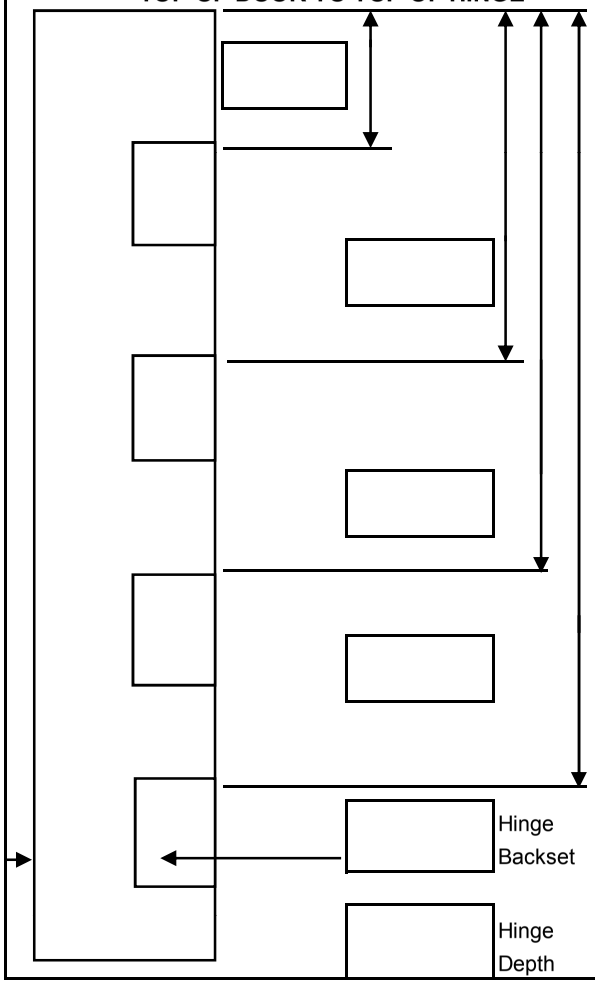

TOP OF DOOR TO CENTRE OF LOCK

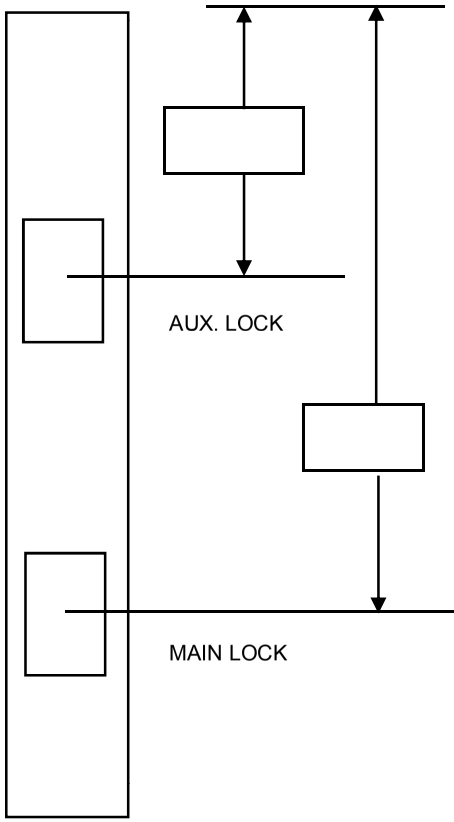

OTHER HARWARE / REMARKS

DOOR NO'S.	SWING

TOTAL DOORS ON THIS PAGE